iDIRECT iNFINITI & Evolution

1.5W Universal Ku-Band BUC (P/N: E0001101-0001)
3W Universal Ku-Band BUC (P/N: E0001100-0001)

The 1.5W and 3W Universal Ku-band Block Up Converters (BUC) are more power efficient and compact in design for ease of deployment. Compatible for use with both the iNFINITI and Evolution platforms, these BUCs support both standard and extended Ku-band for increased flexibility.

Electrical Specifications

Output Frequency Range	13.75 to 14.5 GHz
Input Frequency Range	950 to 1,700 MHz
Conversion Type	Single, fixed L.O.
L.O. Frequency	12.80 GHz
Output Power @ 1dB G.C.P.	**1.5W** *: +31.5 dBm min. @ +25C; +31 dBm min. over temp. **3W**: +34.5 dBm min. @ +25C; +34 dBm min. over temp.
Linear Gain	**1.5W** *: 55 dB typ., 48 dB min. **3W**: 58 dB typ., 51 dB min.
ACPR	**1.5W** *: -26 dBc typ. @ Pout = +31 dBm **3W**: -26 dBc typ. @ Pout = +34 dBm
Requirement for External Reference	
[Frequency]	10 MHz (sine-wave)
[Input Power]	-5 to +5 dBm @ Input port
[Phase Noise]	-125 dBc/Hz max. @ 100 Hz -135 dBc/Hz max. @ 1 kHz -140 dBc/Hz max. @ 10 kHz
L.O. Phase Noise (SSB)	-60 dBc/Hz max. @ 100 Hz -70 dBc/Hz max. @ 1 kHz -80 dBc/Hz max. @ 10 kHz -90 dBc/Hz max. @ 100 kHz -100 dBc/Hz max. @ 1MHz
Spurious	
[in band]	-50 dBc max. @ 13.75 to 14.5 GHz
[in receive band]	-70 dBm max. @ 10.95 to 12.75 GHz
[out-of-band]	-50 dBc max.
Input Impedance	75 ohms nom.
Input V.S.W.R.	2 : 1 max.
Output V.S.W.R.	2 : 1 max.
DC Power Requirement	
[Voltage Range]	+24 VDC (+15 to +30 VDC)
[Power Consumption]	1.5W: 15 W max. @ Pout = +31 dBm; 12 W max. @ No IF, +25 C; 20 W max. @ Saturation 3W: 22 W max. @ Pout = +34 dBm; 15 W max. @ No IF, +25 C; 25 W max. @ Saturation

iDIRECT iNFINITI & Evolution
Universal Ku-Band 1.5W BUC (P/N: E0001101-0001)
Universal Ku-Band 3W BUC (P/N: E0001100-0001)

Mechanical Specifications

Input Interface	F-type, female
Output Interface	Waveguide, WR75 (with Groove)
Dimension & Housing (without interface connector)	91.55 (L) x 68 (W) x 42.5 (H) mm [3.60" (L) x 2.68" (W) x 1.67" (H)]
Weight	350 g max. [0.77 lbs max.]

Environmental Specifications

Temperature Range (ambient)	-40 to +55 C (Operating) ** -40 to +75 C (Storage)
Humidity	0 to 100 % ***
Altitude	15,000 feet
Compliance	CE, FCC, RoHS

*** 1.5W future availability.**
**** Conditional on connection with OMT and TRF.**
***** Assumes hermetically-sealed OMT and Feed horn.**

iDIRECT iNFINITI & Evolution

Universal Ku-Band 1.5W BUC (P/N: E0001101-0001)
Universal Ku-Band 3W BUC (P/N: E0001100-0001)
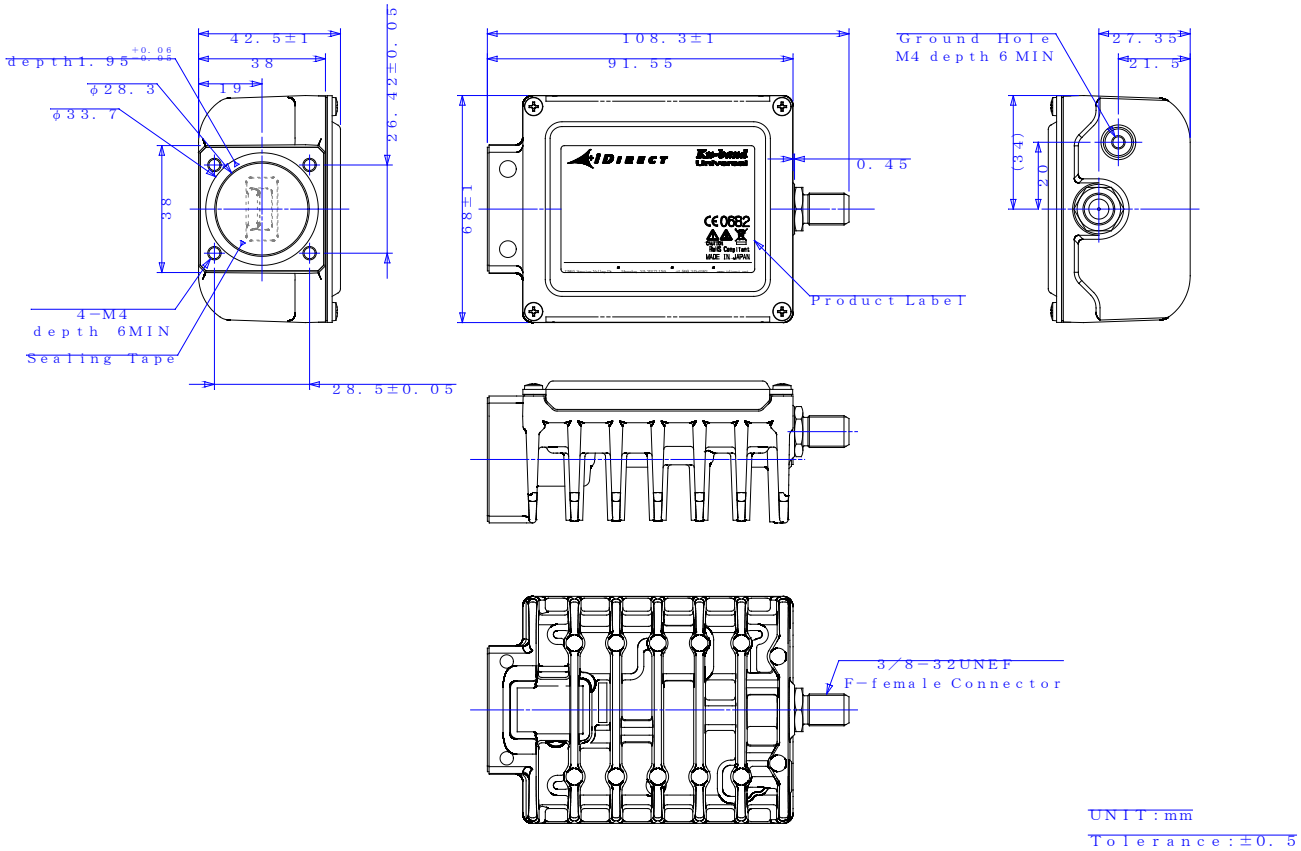
Mechanical Drawing